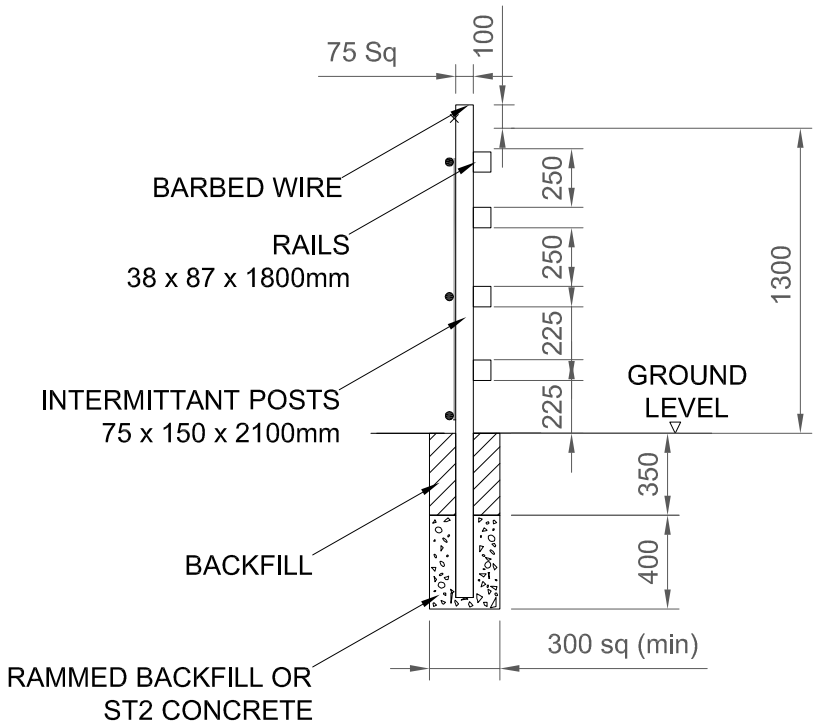

SECTION THROUGH INTERMITTANT POST

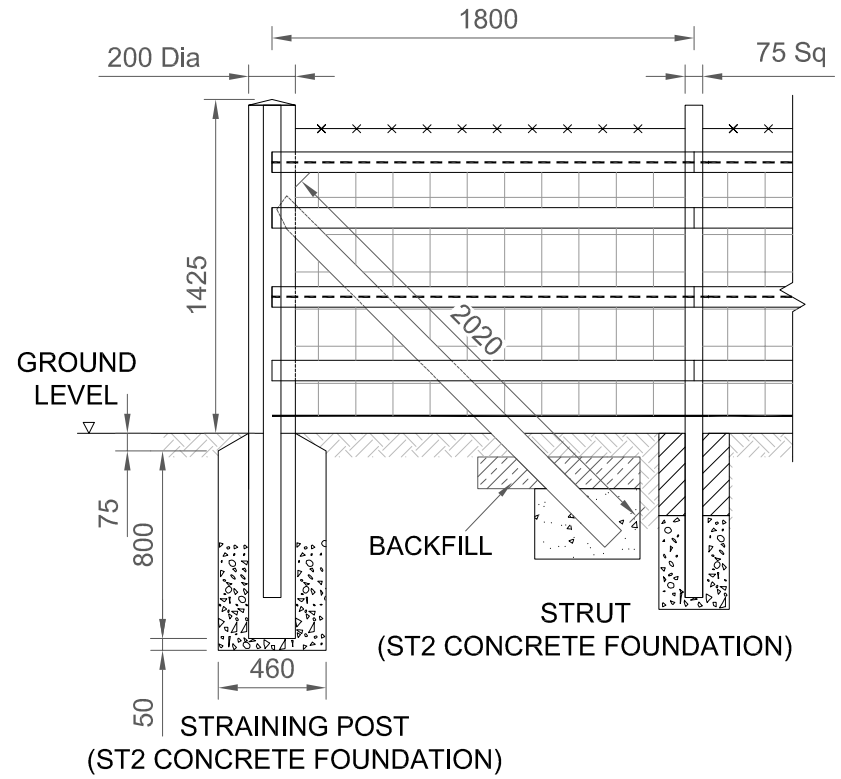

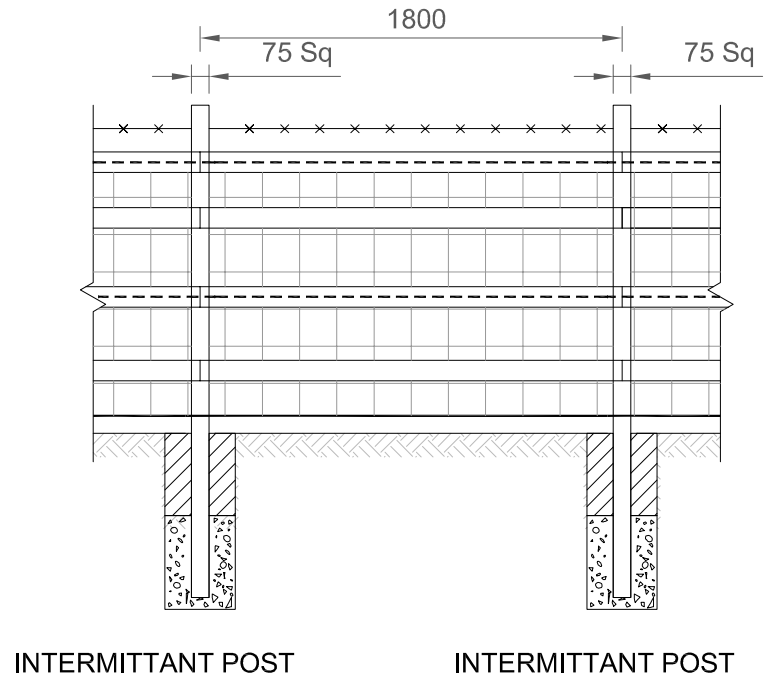

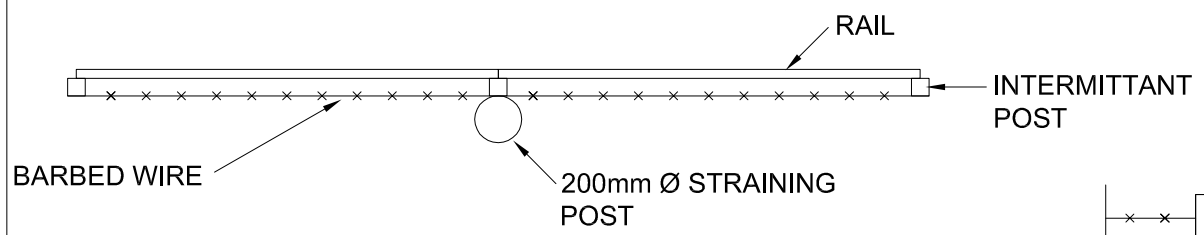

TYPICAL PLAN

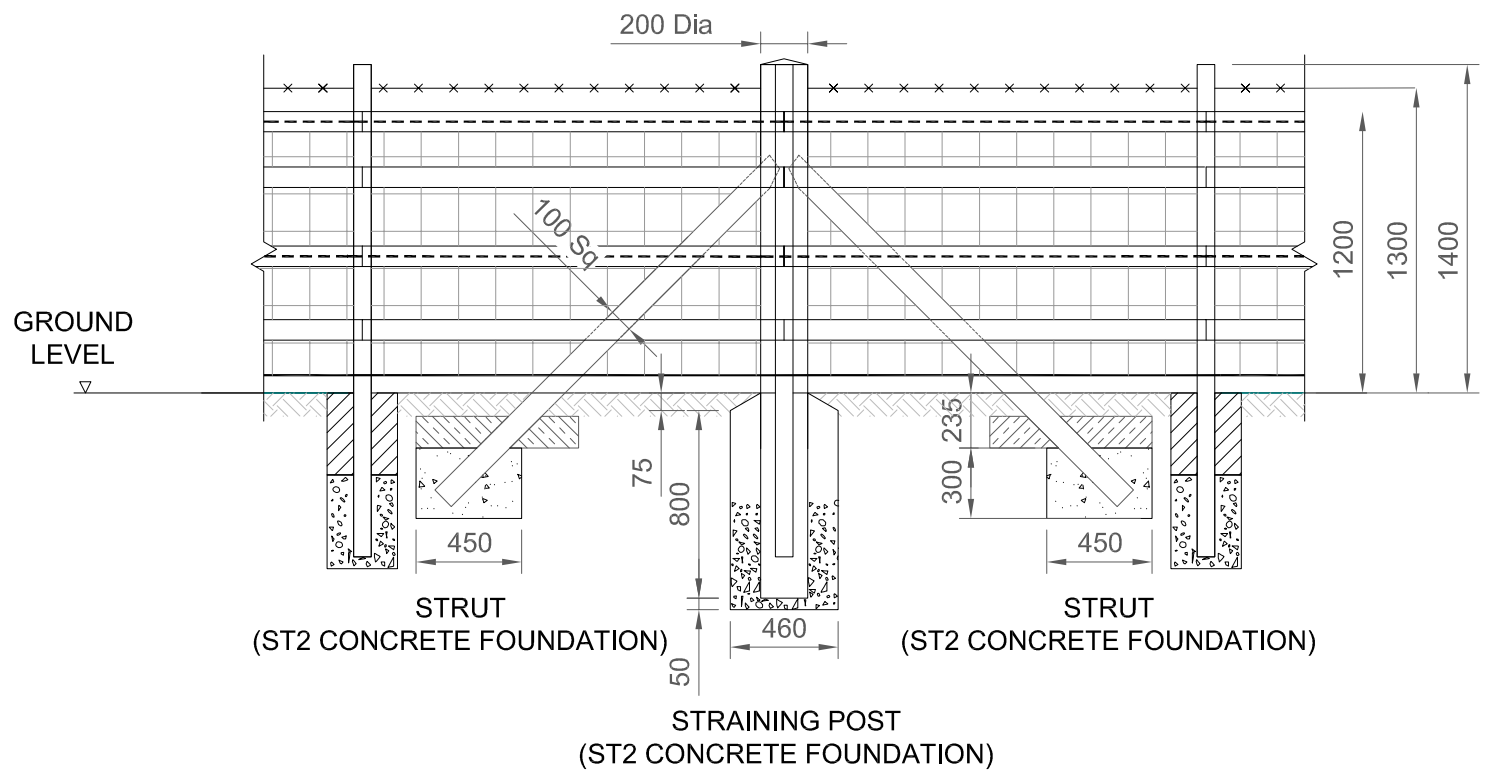

TIMBER POST AND RAIL WITH WIRE MESH STOCK PROOF TYPE F9

STRAINING POSTS - (200 Ø min x 2300mm Long)	To be provided at all ends, acute corners and at intervals not greater than 150m on straight sections.
TURNING/CONTOUR POSTS - (200 Ø min x 2500mm Long)	To be provided at obtuse corners and at acute ground undulations.
INTERMEDIATE POSTS - (75 x 150 min X 2100mm Long)	To be provided at 1.8m centres max and at acute variations in level.

NOTES

1. All dimensions are in millimetres.
2. All posts and struts to be sawn timber.
3. BS 1722 Part 2 applies unless otherwise stated.
4. Galvanised high tensile stock fence HT8-80-15 Wire mesh to comply with BS 1722-2:2006
5. Details of posts and connections shall be in accordance with Drawing Nos. M8MFJV/AW/003 F3 and 004 F4.
6. The wire shall be fixed on the field side of the fence unless otherwise stated.
7. Posts can be supported by rammed backfill or concrete ST2 as required.
8. Where plain or barbed wire is required it shall be comply with BS EN 10223-4.
9. 4 rail fence - BS 1722 part 7 applies unless otherwise stated.

CLIENT: TRANSPORT SCOTLAND — An agency of The Scottish Government

PROJECT TITLE: M8 M73 M74 Motorway Improvements

REV	REVISIONS	BY	CHKD	APP'D	DATE

AMENDMENTS

This map is based upon Ordnance Survey material with the permission of Ordnance Survey on behalf of the Controller of Her Majesty's stationery Office (c) Crown copyright 2011. Any unauthorised reproduction infringes Crown copyright and may lead to prosecution or civil proceedings. Scottish Executive Licence number : 100046668 2011.

DESIGN BY:	DM	CHECKED BY:	GG
DATE:	April 10	DATE:	April 10
DRAWN BY:	CF	APPROVED BY:	MB
DATE:	April 10	DATE:	April 10
DRAWING STATUS	CONTRACT		

ENGINEER: mouchel FAIRHURST — IN ASSOCIATION WITH SIAS amec

DRAWING TITLE: Accommodation Works Timber Post & Rail With Wire Mesh Stock Proof Type F9

SCALE @ A3	DRAWING NO	REV
NTS	M8MFJV/AW/009	-